ERos® Extreme Performance Features

PARLEC EROS® SYSTEM FEATURES

CERTIFIED G2.5 HIGH SPEED PERFORMANCE

All surfaces are ground whether they are critical or not

Heat treated, high strength alloy steel for the best balance of toughness and wear strength

Ground v-groove and flange OD for reliable tool changes

Special designed trapezoidal threads for extra strength

Polished 2 Micron collets with .00008" or 2 micron gage tolerance for the ultimate concentricity and grip force in ER Collet Systems

Custom length collet seat for maximum contact which provides rigidity and grip force

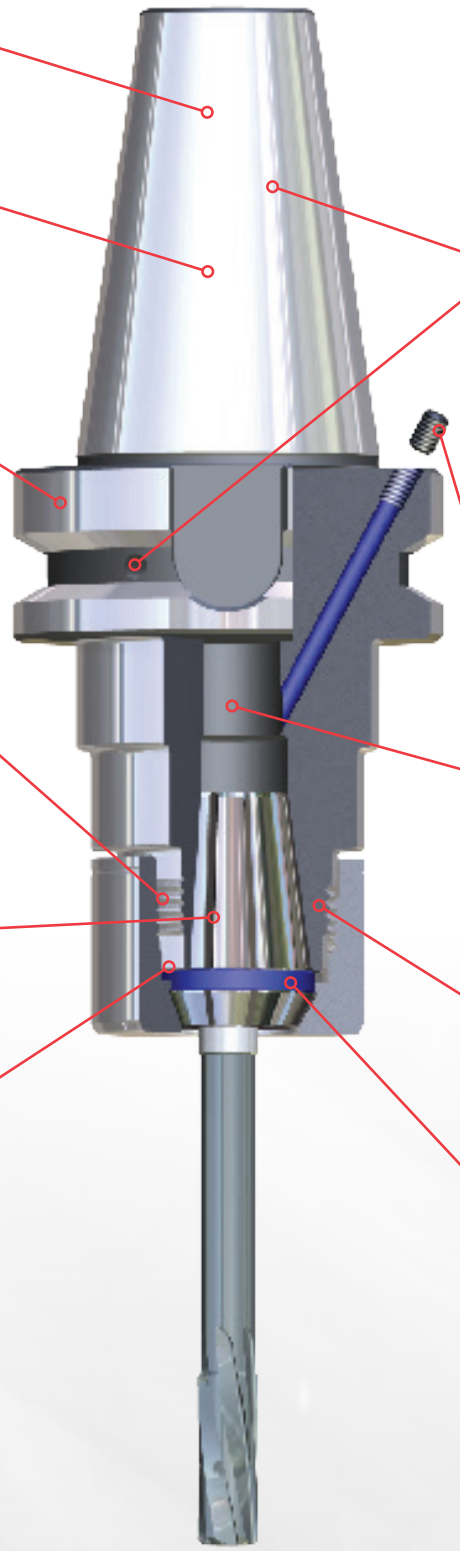

Certified Balance to G2.5 and AT3 Taper Specification for consistent reliable performance tool change to tool change

Available AD/B Coolant converts from through spindle to flange entry coolant supply

Back-Up screws available upon request on tools with sufficient length

Precision ground OD, threads and two pilot bores provide the most advanced and precise clamping nut available

2 Micron Collet Identification Ring